TECHNICAL DATA SHEET

Range : SELF-CLOSING FLUSH VALVE
Ref : 13918 - CONCEALED PRESTO ECLAIR BUILT



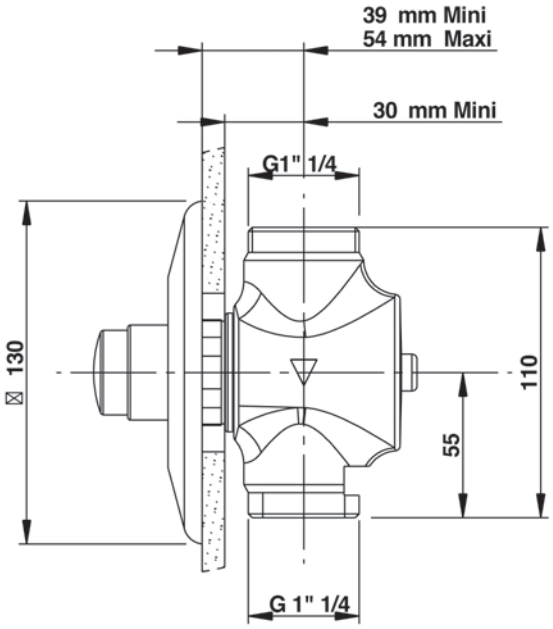

> Working pressure :
- 1 to 5 bar

> Volume of discharge :
- Adjustable from 6 to 9 litres with stop valve not included
- Anti-water-hammering device

> Flow time :
- From 7 to 9 seconds

> Hydraulic supply :
- MM G 1"1/4 In line
- Outlet connection on flush pipe Ø 32 mm

> Material and colour finish :
- Brass body
- Stainless steel front plate with chrome-plated

> Security :
- Anti-flowback device prevents the contamination of the water network from polluted water backflow

> Delivered with :
- Instruction manual

> Standards & approvals :
- Brass body in accordance with EN 1982, EN 12164, EN 12165
- 200-hour neutral salt spray resistant (NSS) in accordance with ISO 9227

This document is not contractual. We reserve the right to modify the characteristics of our products without notice in advance. All our brands and models are registered trade marks.

PRESTO (LES ROBINETS) - PRESTO GROUP: 7 rue Racine 92542 Montrouge Cedex FRANCE - Tel. : +33 (0)1 46 12 34 56 - Fax : +33 (0)1 47 35 69 82 - email : serviceclient@presto-group.com