TECHNICAL DATA SHEET

Range: SO'O
Ref: 56236 - PRESTO SO'O Mixer - 1,9 L/mn - Prestogreen



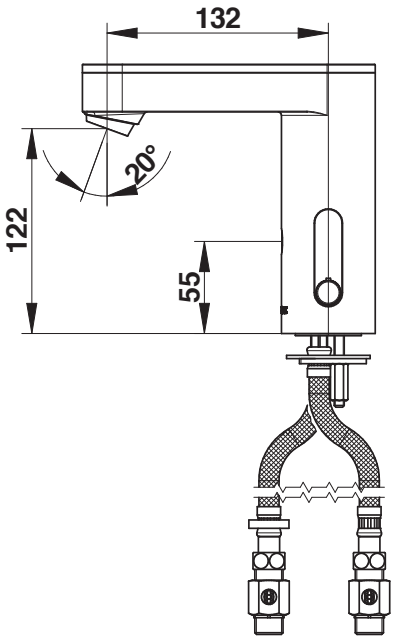

> Working pressure :
- 1 to 5 bar

> Flow :
- 1.9 l/min with integrated flow limiter
- High quality anti-limescale aerator (new aerator since June 2016)
- Anti-water-hammering design

> Hydraulic supply :
- G 3/8'' (12x17)

> Power supply :
- 6 V lithium battery (CRP2 type) in a casing placed within the tap body

> Material and colour finish :
- Chrome-plated metal alloy components
- Injected molded metal body and cover

> Thermal resistance :
- Resistant to a temperature of 75°C for 30-minute-thermal-shocks

> Security :
- Anti-overflow security time: 30 seconds
- Anti-blocking system preventing the water to flow continuously
- Solenoid valve automatically shut down in case of power shortage or in case of sensor degradation

> Delivered with :
- Instruction manual
- 2 Fastening nuts
- 1 Gasket and 1 Washer
- 2 PEX flexible hoses with F 3/8'' nut (12x17) and NF non-return valve
- 2 Straight stop valves G 3/8" (12x17)
- 2 Filter gaskets

> Standards & approvals :
- Molded chrome-plated body in accordance with EN 12540
- 200-hour neutral salt spray resistant (NSS) in accordance with ISO 9227

Ce document n'est pas contractuel ; nous nous réservons le droit de modifier les caractéristiques de nos produits sans préavis. Toutes nos marques et tous modèles sont déposés.

1,9 l/min | 3/8" | 75°C | CE | ACS | ISO 9001 BUREAU VERITAS Certification

PRESTO (LES ROBINETS) : Siège Social: 7 rue Racine 92542 Montrouge Cedex - Site de Production: 4 rue Lavoisier 17110 St-Georges de Didonne - Tel: 01.46.12.34.56 - Fax: 01.40.92.00.12 - www.presto.fr