# HEIMBERG

## TECHNICAL DATASHEET



**HEIMBERG-ADVANCE TOILET BRUSH HOLDER**

| SPECIFICATIONS | INFORMATION |
|---|---|
| Productcode: | HBA-ADV-006-MB |
| Finish | Matt Black |
| Producttype: | Toilet Brush Holder |
| Material | Brass |

Technical Information

W X D X H 120 X110 X 40
How Many Fixings 1 FIXING POINT
Mounting Type WALL MOUNTED

## DRAWING

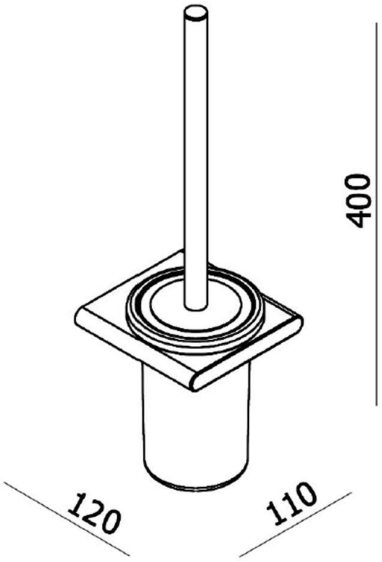


For more information's about this product orour full product range please contact us:
Email: info@heimbergint.com

HEIMBERG