HEIMBERG

TECHNICAL DATASHEET



HEIMBERG-VOLA TOILET PAPER HOLDER

SPECIFICATIONS	INFORMATION
Productcode:	HBA-VOL-002-CP
Finish	Chrome
Producttype:	Paper Holder
Material	Brass

Technical Information

W X D X H 140 X 115X 75
Weight (KG) 0.39
How Many Fixings SINGLE FIXING POINTS
Mounting Type WALL MOUNTED

DRAWING

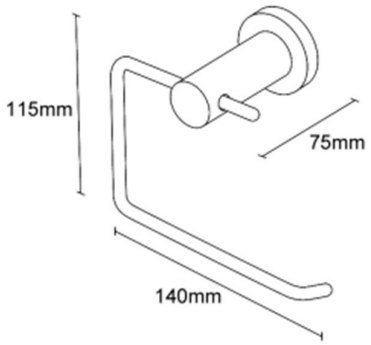

For more information's about this product orour full product range please contact us:
Email: info@heimbergint.com

HEIMBERG