HEIMBERG

TECHNICAL DATASHEET



HEIMBERG-VOLA: TOILET BRUSH HOLDER

SPECIFICATIONS	INFORMATION
Productcode:	HBA-VOL-006-NB
Finish	Brushed Nickel
Producttype:	Toilet Brush Holder
Material	Brass

Technical Information

W X D X H 115X 340
Weight (KG) 0.39
How Many Fixings 2 FIXING POINTS
Mounting Type WALL MOUNTED

DRAWING

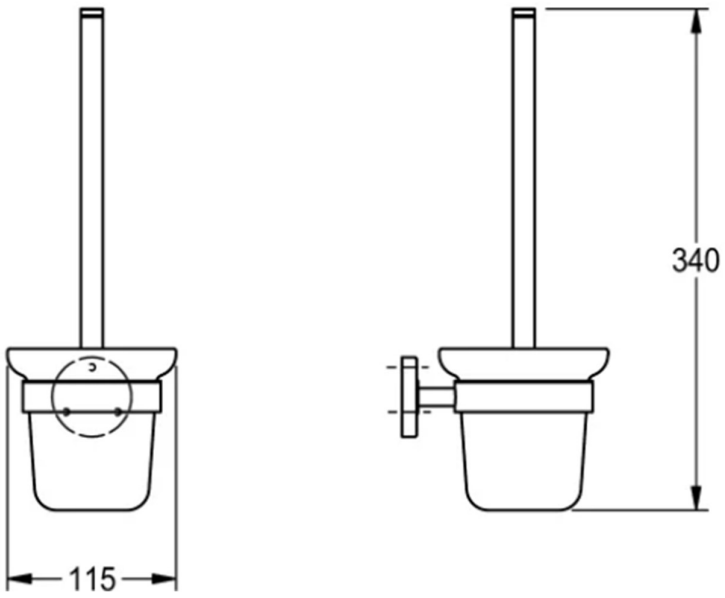

For more information's about this product orour full product range please contact us:
Email: info@heimbergint.com

HEIMBERG