HEIMBERG

TECHNICAL DATASHEET

HEIMBERG-VOLA LED MIRROR WITH 5X MAIN SUPPLY CHROME PLATED.

HBA-VOL-012-CP



5 YEAR GUARANTEE

Against material or manufacturing faults.

The guarantee does not cover normal wear and tear.

SPECIFICATIONS **TECHNICAL INFORMATION**

BRAND	HEIMBERG	LED MIRROR WITH 5X MAIN SUPPLY CHROME PLATED
RANGE	VOLA	
PRODUCT CODE	HBA-VOL-012-CP	
FINISH/COLOUR	CHROME	
PRODUCT TYPE	MIRROR	
MATERIAL	GLASS	

DRAWING

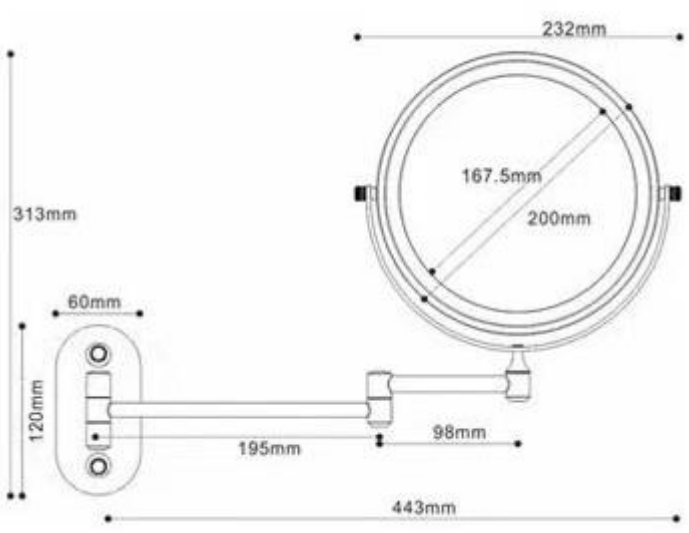

For more information's about this product or our full product range please contact us:
Email: info@heimbergint.com

HEIMBERG