HEIMBERG

TECHNICAL DATASHEET



HEIMBERG-ADVANCE SINGLE LEVER BIDET MIXER W/O WSTE

SPECIFICATIONS	INFORMATION
Product code:	HBM-ADV-112-BG
Finish	Brushed Gold
Product type:	Single Lever Bidet Mixer
Material	body: brass, cartridge: 35mm Sedal Catridge Hose s.s.50cm
Connection size:	½
Test Range:	0.2-5 bar
Max Pressure:	16 bar

Hot water inlet temperature: max 90°C

recommended use (saving energy):60°C

Note: if the static pressure exceeds 5bar, it must be installed a pressure reducing valve, to avoid pressure differences in cold and hot water supply

TECHINICAL INFORMATION: BIDET MIXER

SINGLE HANDLE W/O POP UP WSTE

DILLR HOLE DIA 35MM

5 YEARS GUARANTEE 1 YEAR ON COLOR

DRAWING

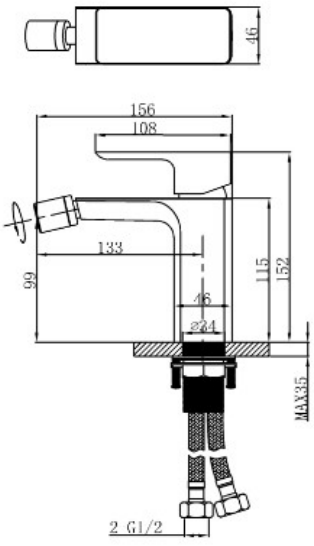

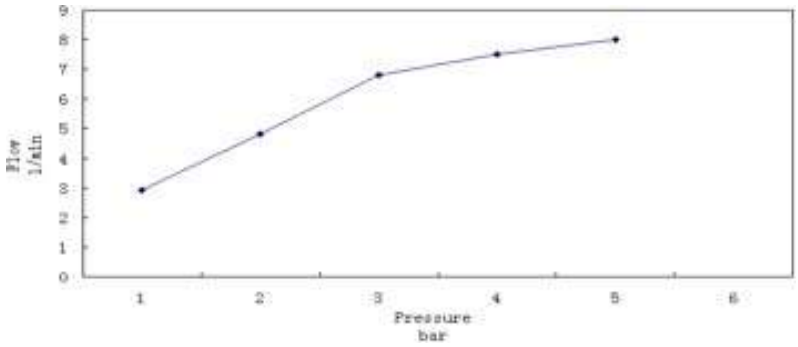

For more information's about this product or our full product range please contact us:
Email: info@heimbergint.com

HEIMBERG