HEIMBERG

TECHNICAL DATASHEET



HEIMBERG-ADVANCE FREE STANDING BATH MIXER

SPECIFICATIONS	INFORMATION
Product code:	HBM-ADV-190-CP
Finish	Chrome
Product type:	Free Standing Bath Mixer
Material	body: brass, cartridge: 35mm Sedal Catridge
Connection size:	½
Test Range:	0.2-5 bar
Max Pressure:	16bar

Hot water inlet temperature: max 90°C

recommended use (saving energy):60°C

Note: if the static pressure exceeds 5bar, it must be installed a pressure reducing valve, to avoid pressure differences in cold and hot water supply

TECHINICAL INFORMATION: BATH MIXER

SINGLE HANDLE WITH CONCEALED MECHANISM

5 YEARS GUARANTTE 1 YEAR ON COLOR

DRAWING

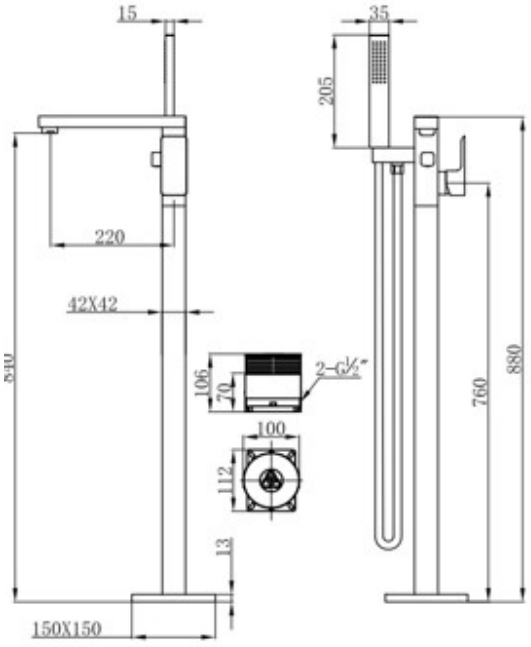

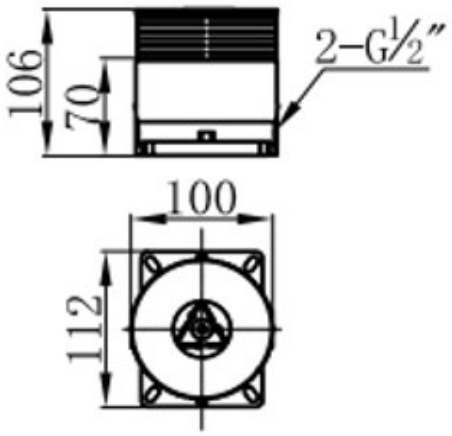

For more information's about this product or our full product range please contact us:
Email: info@heimbergint.com

HEIMBERG