HEIMBERG

TECHNICAL DATASHEET



HEIMBERG-TRACK: 3WAY CONCEALDE BATH/SHOWER MIXER WITH DIVETER

SPECIFICATIONS INFORMATION

Product Model Number : HBM-TRA-171-BG
Surface Treatment Brushed Gold
Product Mode Single Lever 3 Way Concealed Bath/Shower Mixer with Diverter, Brushed Gold
Material : Body : Brass,
SUS Cartridge : 35mm HT Cartridge Connection Size : 1/2”
Recommended water pressure : 0.5-5bar
MAX Pressure : 16 bar
Hot water inlet temperature 90℃
Recommended operating temperature (energy saving) : 45℃
Attention: If the static pressure exceeds 5bar, a pressure reducing valve must be installed to avoid the pressure difference when the hot and cold water is supplied
Technical Information :
Wall Concealed Bath/Shower Mixer with Diverter,
Single Lever
Shape: Square
Included :
3 Way Concealed Bath/Shower Mixer Body
Panel And handle
E-box

DRAWING

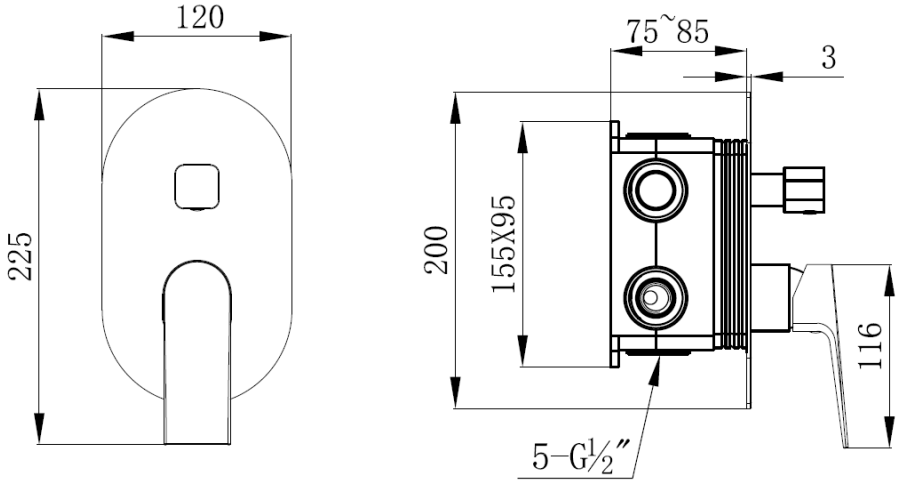

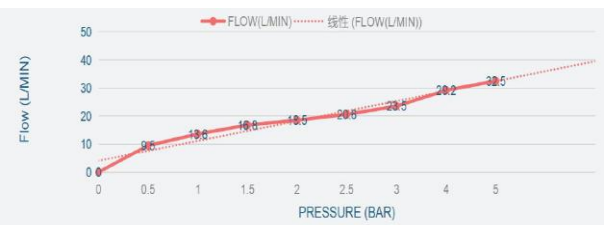

For more information’s about this product or our full product range please contact us:
Email: info@heimbergintl.com

HEIMBERG