HEIMBERG

TECHNICAL DATASHEET



HEIMBERG-VOLA SINGLE LEVER BASIN MIXER W/O WASTE

SPECIFICATIONS	INFORMATION
Product code:	HBM-VOL-100-CP
Finish	Chrome
Product type:	Single Lever Basin Mixer
Material	body: brass, cartridge: 35mm Sedal Catridge Hose s.s.50cm
Connection size:	½
Test Range:	0.2-5 bar
Max Pressure:	16 bar

Hot water inlet temperature: max 90°C

Recommended use (saving energy):60°C

Note: if the static pressure exceeds 5bar, it must be installed a pressure reducing valve, to avoid pressure differences in cold and hot water supply

TECHINICAL INFORMATION: BASIN MIXER

SINGLE HANDLE W/O POP UP

WASTE DILLR HOLE DIA 35MM

5 YEARS GUARANTEE 1 YEAR ON COLOR

DRAWING

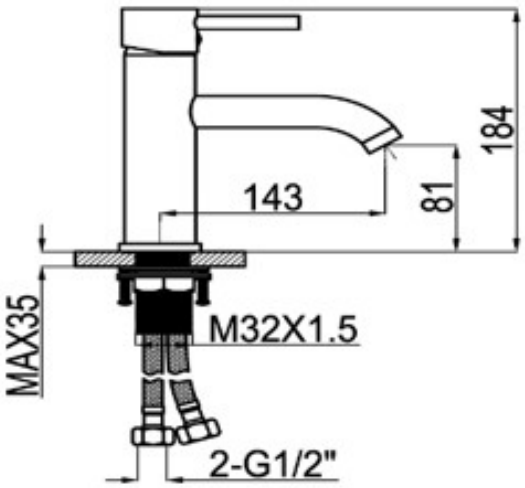

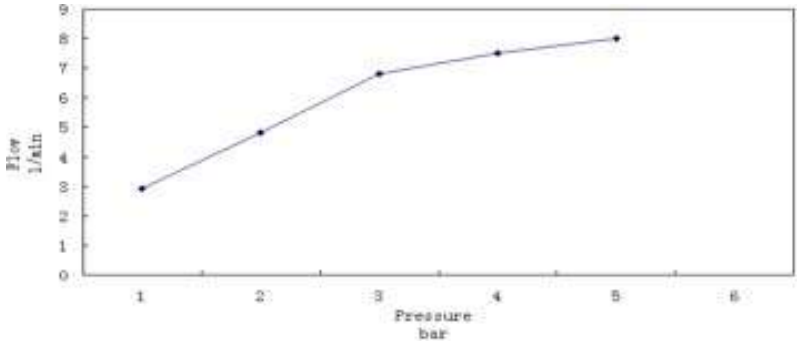

For more information's about this product or our full product range please contact us:
Email: info@heimbergint.com

HEIMBERG