# HEIMBERG

## TECHNICAL DATASHEET



**HEIMBERG-VOLA SINGLE LEVER WALL MAOUNTED BASIN MIXER W/O WASTE**

| SPECIFICATIONS | INFORMATION |
|---|---|
| Product code: | HBM-VOL-111-MB |
| Finish | Matt Black |
| Product type: | Wall Mounted Single Lever Basin Mixer |
| Material | body: brass, cartridge: 35mm Sedal Catridge |
| Connection size: | ½ |
| Test Range: | 0.2-5 bar |
| Max Pressure: | 16 bar |

Hot water inlet temperature: max 90°C

Recommended use (saving energy):60°C

Note: if the static pressure exceeds 5bar, it must be installed a pressure reducing valve, to avoid pressure differences in cold and hot water supply

TECHINICAL INFORMATION: WALL MOUNTED

BASIN MIXER SINGLE HANDLE

W/O POP UP WASTE

DILLR HOLE DIA 35MM

5 YEARS GUARANTEE 1 YEAR ON COLOR

## DRAWING

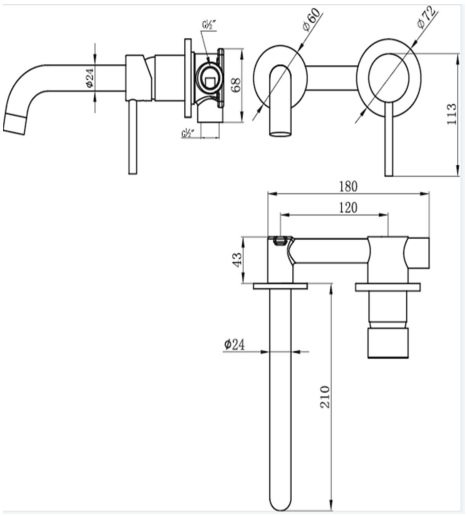


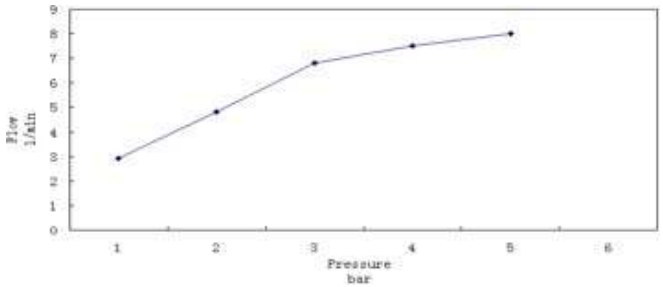


For more information's about this product or our full product range please contact us: HEIMBERG
Email: info@heimbergint.com