HEIMBERG

TECHNICAL DATASHEET



HEIMBERG-VOLA SHOWER COLUM WITH BATH MIXER

SPECIFICATIONS	INFORMATION
Product code:	HBM-VOL-156-CP
Finish	Chrome
Product type:	Rain Shower Combination with Mixer
Material	Body: Brass, Sedal Catridge Hose s.s.Top & Hand Shower
Connection size:	½
Test Range:	0.2-5 bar
Max Pressure:	16 bar

Hot water inlet temperature: max 90°C

recommended use (saving energy):60°C

Note: if the static pressure exceeds 5bar, it must be installed a pressure reducing valve, to avoid pressure differences in cold and hot water supply

TECHINICAL INFORMATION: SHOWER COMBINATION

SINGLE HANDLE

304 BRASS HEAD SHOWER 200X200

5 YEARS GUARANTEE 1 YEAR ON COLOR

DRAWING

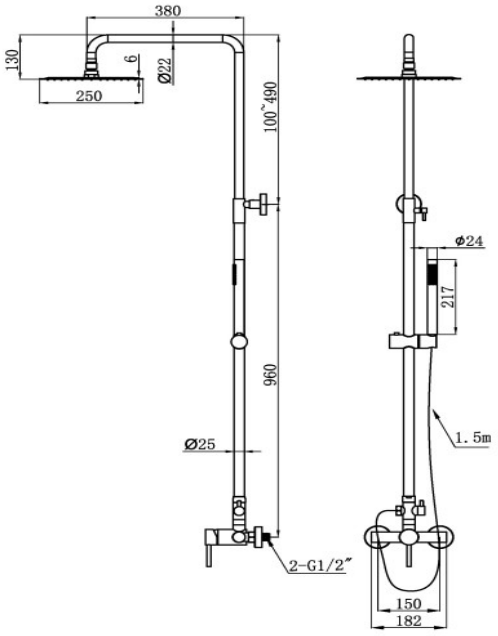

For more information's about this product or our full product range please contact us:
Email: info@heimbergint.com

HEIMBERG